Dane aktualne na dzień: 30-09-2026 16:12

Link do produktu: https://www.specdiag.pl/komatsu-instrukcje-napraw-schematy-dtr-komatsu-d31ex-22-d31px-22-d37ex-22-d37px-22-p-1514.html

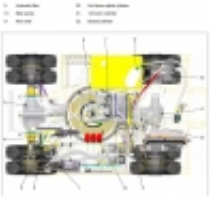

# Komatsu instrukcje napraw, schematy, DTR - Komatsu D31EX-22, D31PX-22, D37EX-22, D37PX-22

| | |
|---|---|
| Cena | **400,00 zł** |

## Opis produktu

Dokumentacje warsztatowe - instrukcje napraw - książki serwisowe - Komatsu

BULLDOZER - DOZER - CRAWLER DOZER - WHEEL DOZER

Komatsu D31EX-22
Komatsu D31PX-22
Komatsu D37EX-22
Komatsu D37PX-22

**Shop Manual - instrukcje napraw - DTR**

Instrukcje napraw - schematy instalacji

## DISASSEMBLING

**STEP 11**
Remove the brake shaft.

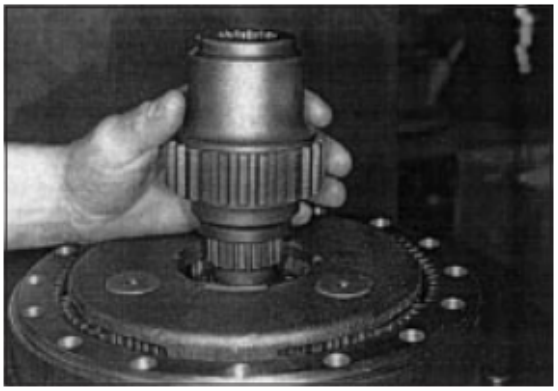

**STEP 12**
Remove the toothed ring.

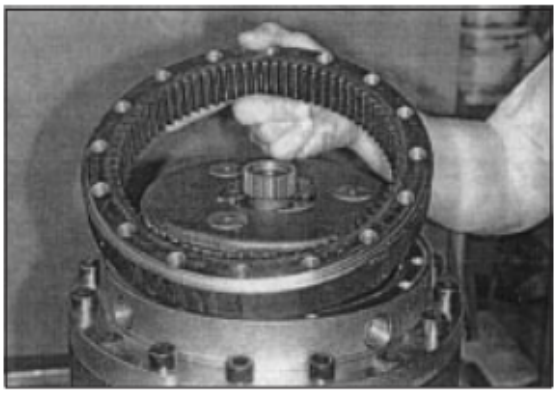

**STEP 13**
Remove the 1st stage sun gear.

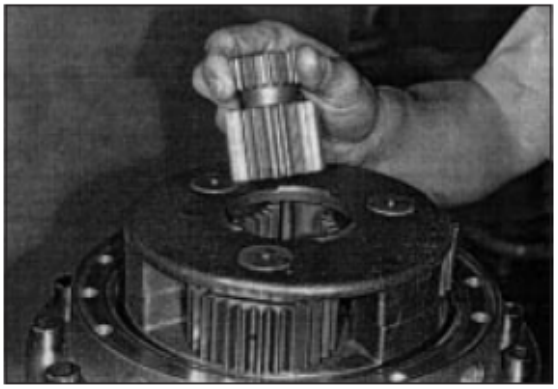

# WORK EQUIPMENT - ONE PIECE BOOM

## PW150ES-6K

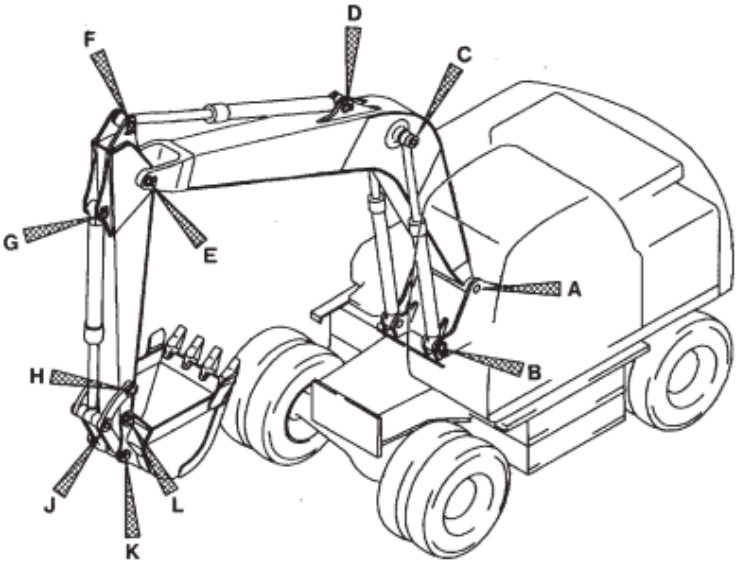


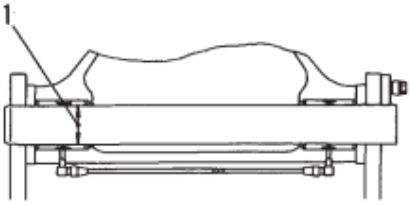


A – A

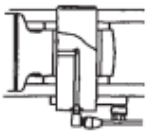

D – D

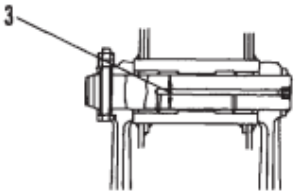


H – H

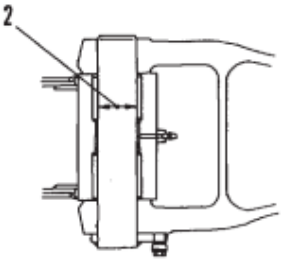


E – E

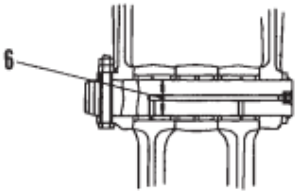


J – J

B – B

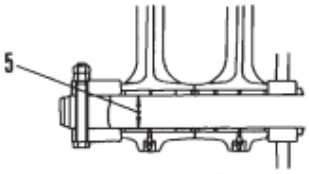


K – K

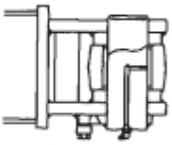

F – F

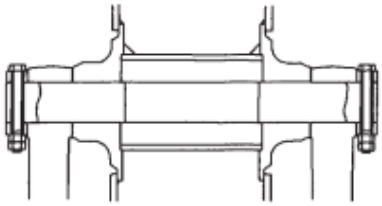

C – C

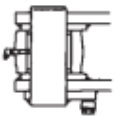

G – G

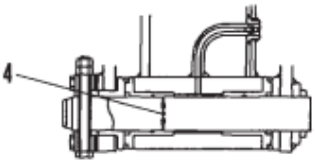


L – L

## Circuit diagram related to engine preheater/starting motor/charging system

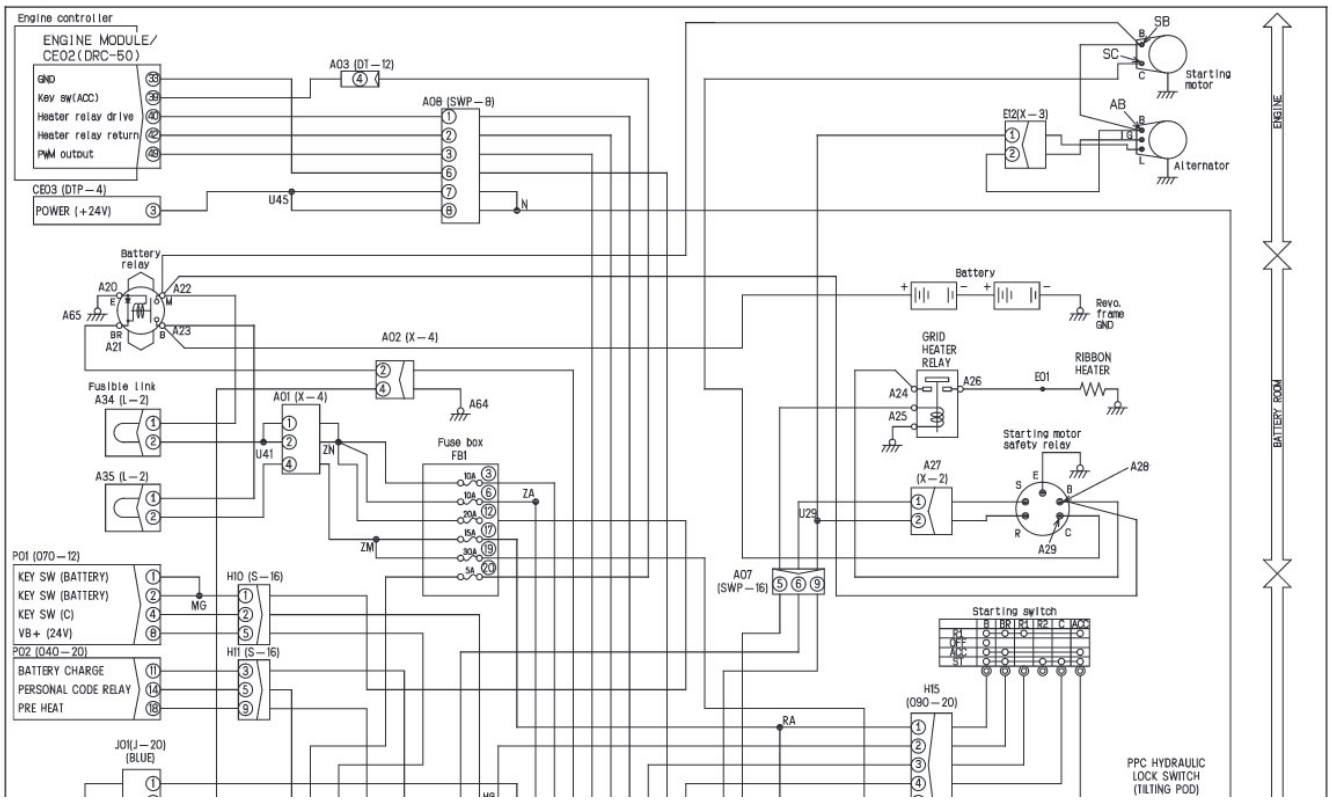

N·m **90 ± 3 Nm {9.2 ± 0.3 kgm}**

2] .

N·m Recheck the torque:
**90 ± 3 Nm {9.2 ± 0.3 kgm}**

3]

N·m **90° ± 5°** (Tighten with an angle tightening tool.)

a Tool **A6**: wrench is adopted for angle tightening. (Refer to the tool list.) (Refer to the tool list.)

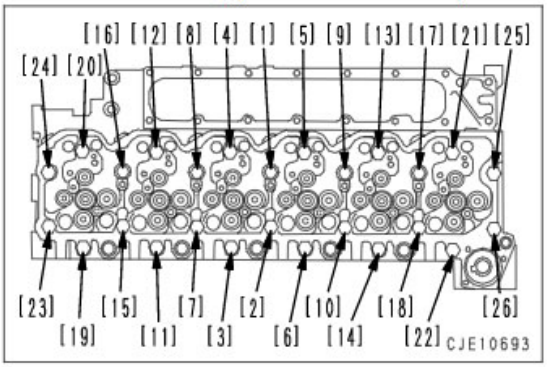


- When an angle tightening tool is not used:
  Put marks on the cylinder head and bolts with a felt-tip pen, and then tighten the bolts an additional **90° ± 5°**.

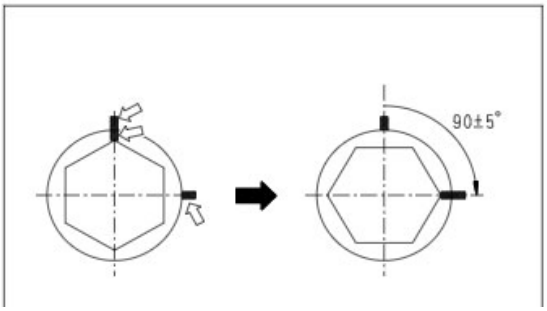


3. Install push rods (57).
4. Install rocker arm support (58).

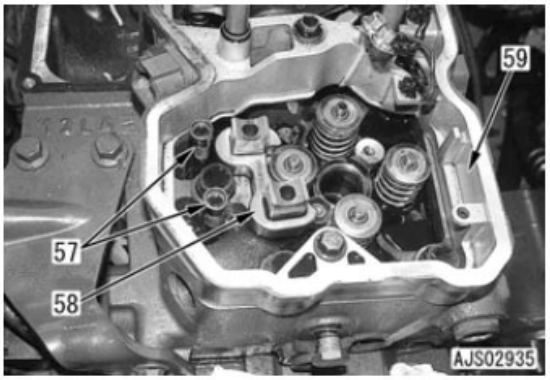


5. Fuel injector assembly
   - Check that there is no damage or dust on the fuel injector sleeve.

5.1. Install O-ring (63) and gasket (64) to fuel injector (62).

5.2. Coat O-ring (63) and the head side of fuel injector (62) with engine oil (EO15W-40).

O-ring (63) and the head side of fuel injector (62): **engine oil (EO15W-40)**

5.3. Install holder (65) to fuel injector (62) with concavity and convexity (A) fitted together.

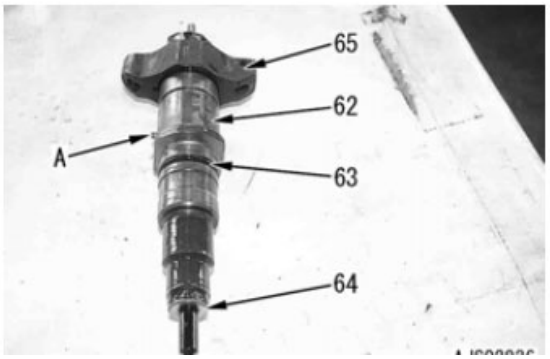

# DISASSEMBLY OF PRESSURE COMPENSATION VALVE ASSEMBLY

Pressure compensation valves
A: For bucket CURL/DUMP, boom Lower arm IN, stabiliser
C: For swing LEFT/RIGHT
D: For arm OUT, boom RAISE
B: For travel

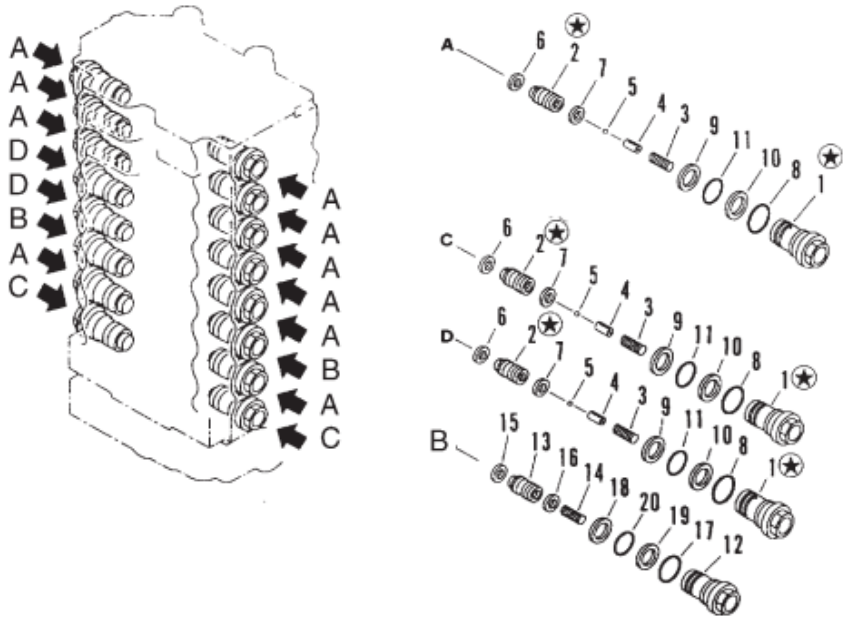


- **Disassembly of pressure compensation valves A,C,D**
- The structure of the parts for pressure compensation valves A, C en D is the same, but the part number for the assembly marked ★ is different, so be careful when assembling.

1. Remove piston (2) and spring (3) from sleeve (1).
2. Remove plug (4) and ball (5) form piston (2).
3. Remove seals (6) and (7) from piston (2).
4. Remove O-ring (8) from sleeve (1), then remove seals (9) and (10), and O-ring (11).

* After disassembling, if there is any abnormality in sleeve (1), piston (2), plug (4), ball (5), or seals (6) and (7), replace the whole pressure compensation valve assembly.

- **Disassembly of pressure compensation valve B**

1. Remove piston (13) and spring (14) from sleeve (12).
2. Remove seals (15) and (16) from piston (13), then remove O-ring (17), seals (18) and (19), and O-ring (20) from sleeve (12).

* After disassembling, if there is any abnormality in sleeve (12), piston (13), or seals (15) and (16), replace the whole pressure compensation valve assembly.

# IDENTIFICATION OF PRESSURE COMPENSATION VALVE ASSEMBLY

Valves are identified by markings on the valve assembly.

# FRONT TRAVEL MOTOR (20 Km/h TRAVEL SPEED SPEC.)

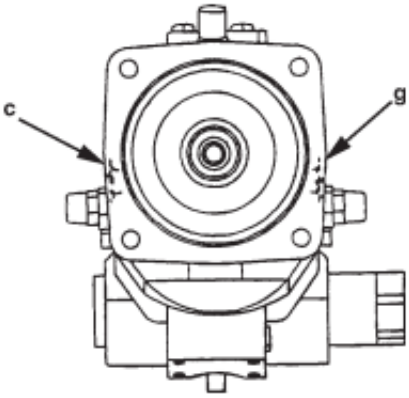


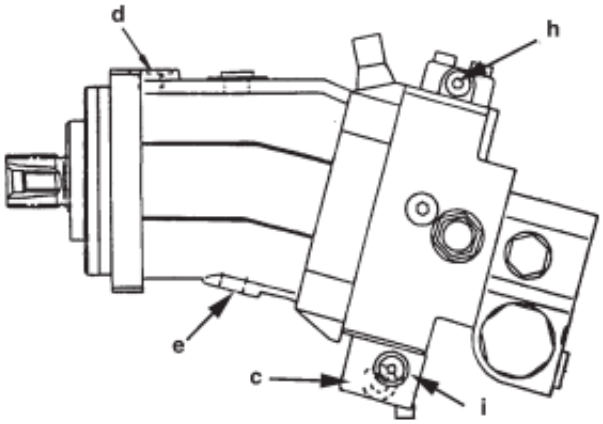


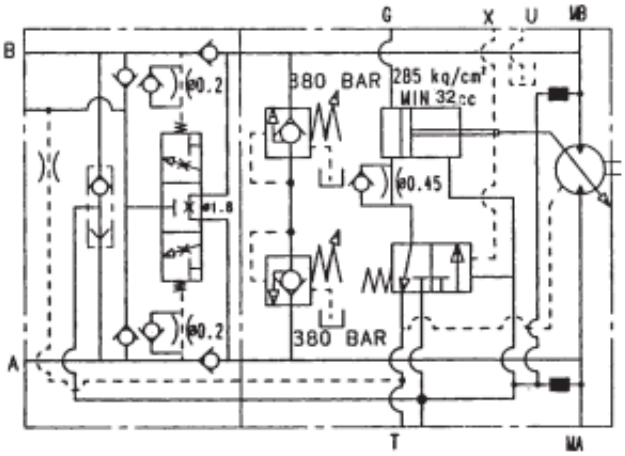


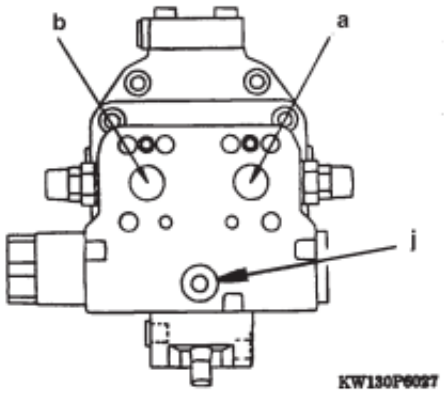


## HYDRAULIC SCHEMATIC

### SPECIFICATIONS

Type: Variable displacement piston motor

Theoretical delivery: Min. 32 cc/rev
Max. 80 cc/rev

Hi-Lo switching-pressure: 2.94 MPa (30 kg/cm²)
Rated speed: 4968 rpm. (Max)

a. Motor inlet (A)
b. Motor outlet (B)
c. Override pressure port (X)
d. Drain port (U)
e. Drain port (T)
f. Pressure test port (MB)
g. Pressure test port (MA)
h. Pressure test port (M1)
i. Pressure test port (G)

# SWING MOTOR

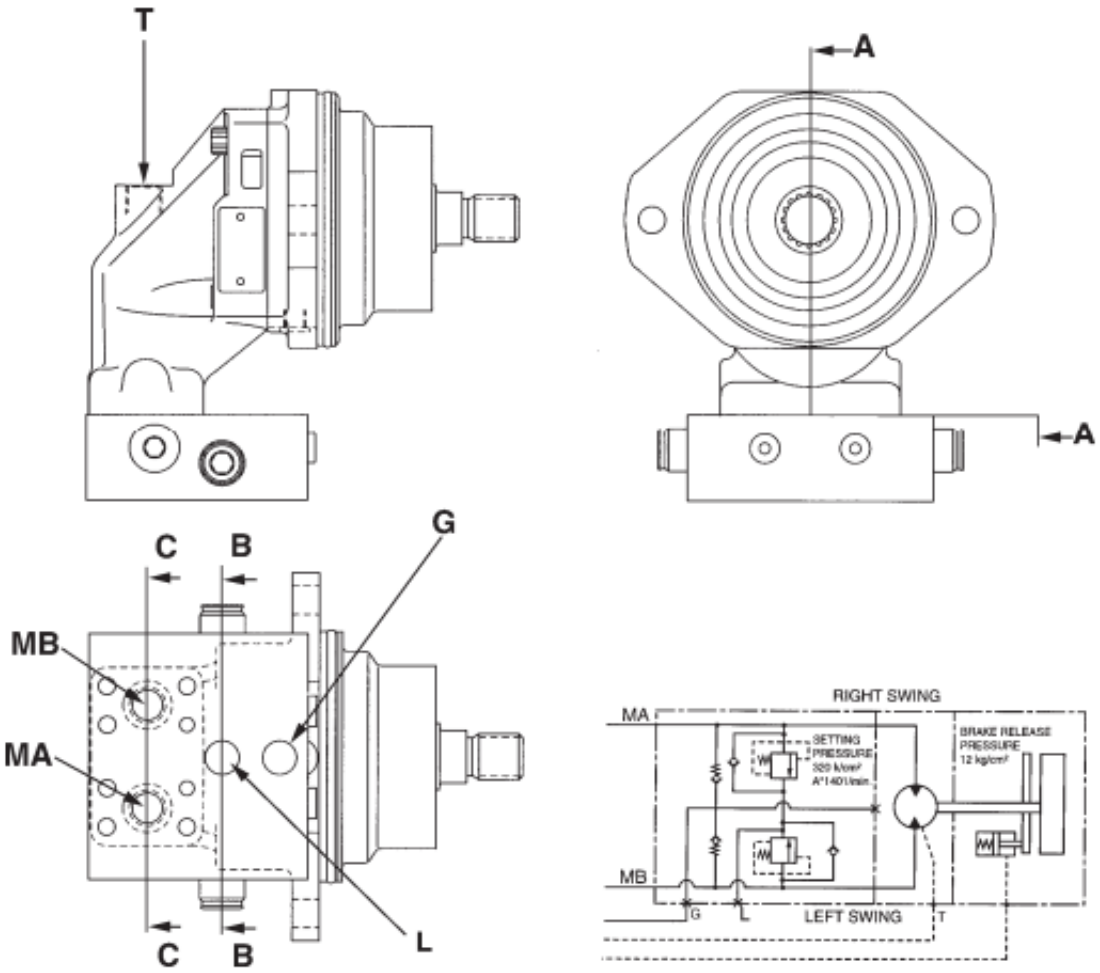


a. Port **G** (to control valve TSW port)
b. Port **MB** (from control valve)
c. Port **MA** (from control valve)
d. Port **T** (to tank)
e. Port **L** (plugged)

**SPECIFICATIONS**

| Type | F12-060-MF-CV-C-509 |
|---|---|
| Theoretical delivery | 59.8 cc/rev |
| Safety valve set pressure | 31.36 MPa (320 kg/cm$^2$) |
| Rated speed | 2250 rpm |

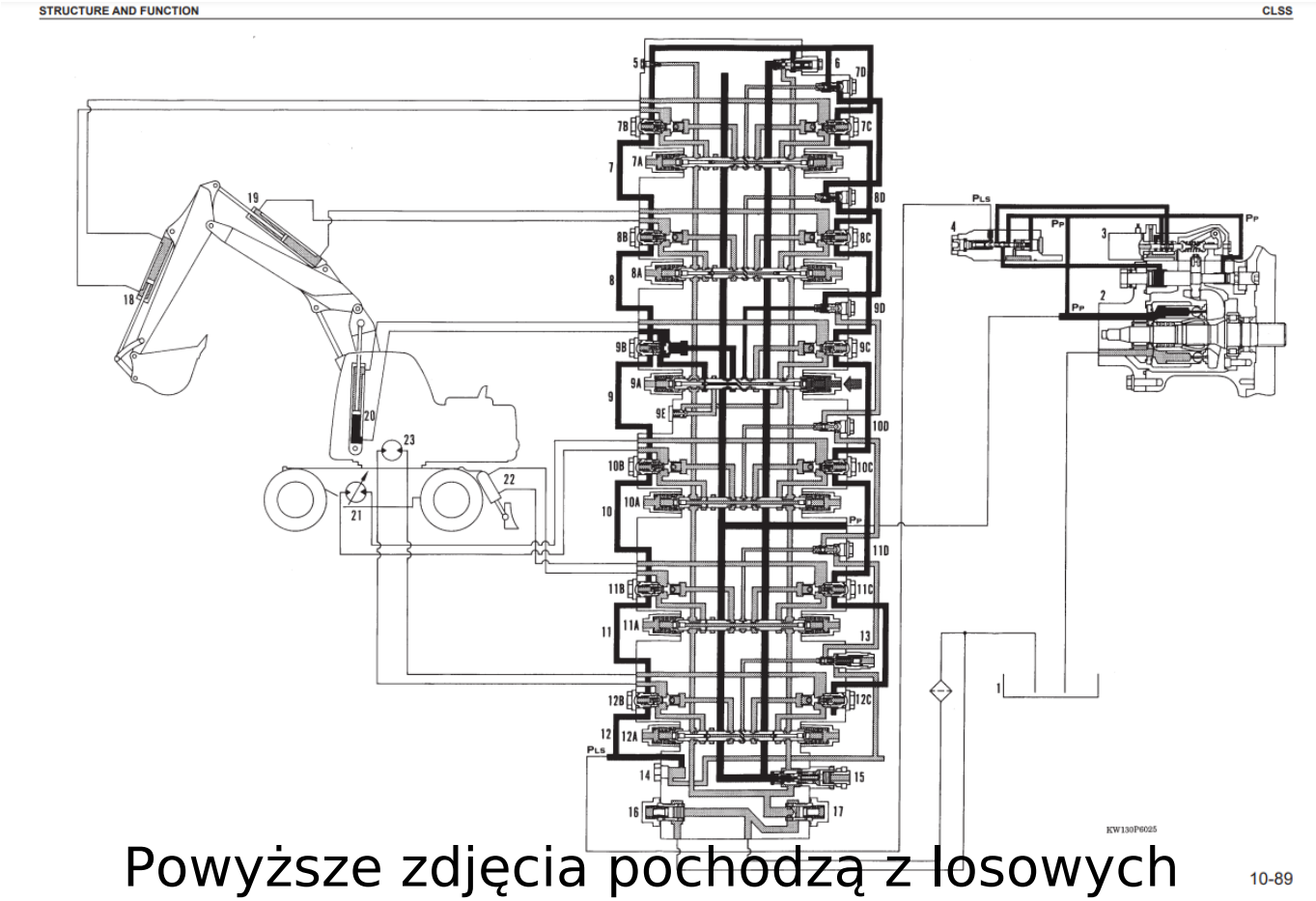


Powyższe zdjęcia pochodzą z losowych instrukcji napraw do maszyn budowlanych marki Komatsu.

Po zakupie otrzymają Państwo dokumentację do właściwego wybranego modelu maszyny.

Format PDF

Język angielski

Kontakt tel: 696 915 311

motodiagnostyka2010@gmail.com

Szukasz instrukcji napraw, schematów lub DTR do innego modelu? Zadzwoń lub napisz do nas.